aIR Liner 258 W (Article No. 754516)

Water-cooled **Hi-End line module** for 1 lamp.
Special aluminum housing.
Highly polished, specially aligned, line-focused aluminum reflector.

Reflector length L 288 mm x reflector width W 50 mm
Irradiated area variable depending on the irradiation distance to substrate,
irradiated width variable from 1 mm to 15 mm (see drawing)
Filament length 258 mm

Power density depending on lamp, voltage and width **up to 787 kW_{el}/m^2**

L 356 mm / W 56 mm / H 109 mm plus Connections and Cables (see drawing)
weight 2.3 kg (without cable)

Installation in all directions possible

Mounting options prepared on the long sides with groove profile 5 and on top (M4x15)

3 m connection cable (7x2.5 mm2) with variable terminal connections

Powerful water-cooling system with a flow of 3 l / min with 3 bar
Water connection Festo QS-G1 / 8-8-I
Temperature of water flow above dew point - Note cooling water specification

Integrated cooling air flow / required cooling air quantity max. 30 m^3 / h

Additional cooling of the lamp ends with compressed air at max. 1 bar
Compressed air connection Festo QS-1 / 8-6

suitable power supply optionally available

The module is supplied without lamps, which can be selected and purchased separately from the extensive range.

Model	Voltage	max Power	Number	Lamps	Power Supply	Power Density
Article No.	Volt	Watt	Lamps	maximum	optionally available	P_{el} in kW_{el}/m^2
		per module		model		
aIR Liner 258 W	400	3.400	1	258-3400	PP455 IEC / UL	787
754516	230	2.500	1	258-2500	PP320 IEC / UL	579
	120	1500	1	258-1500	PP320 IEC / UL	347

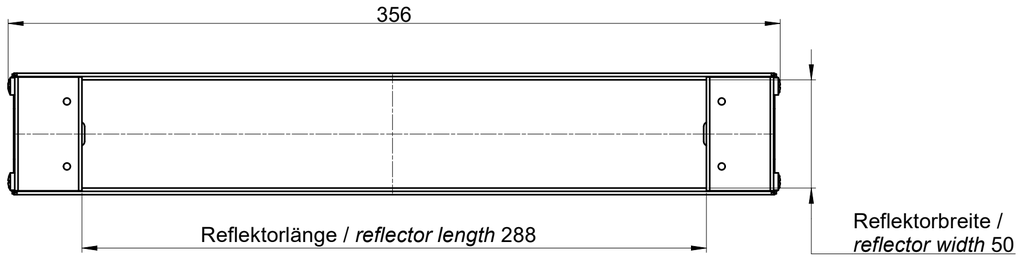

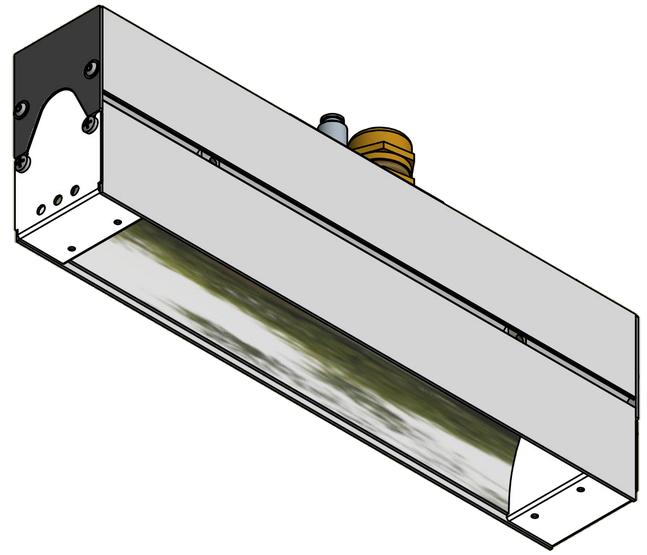

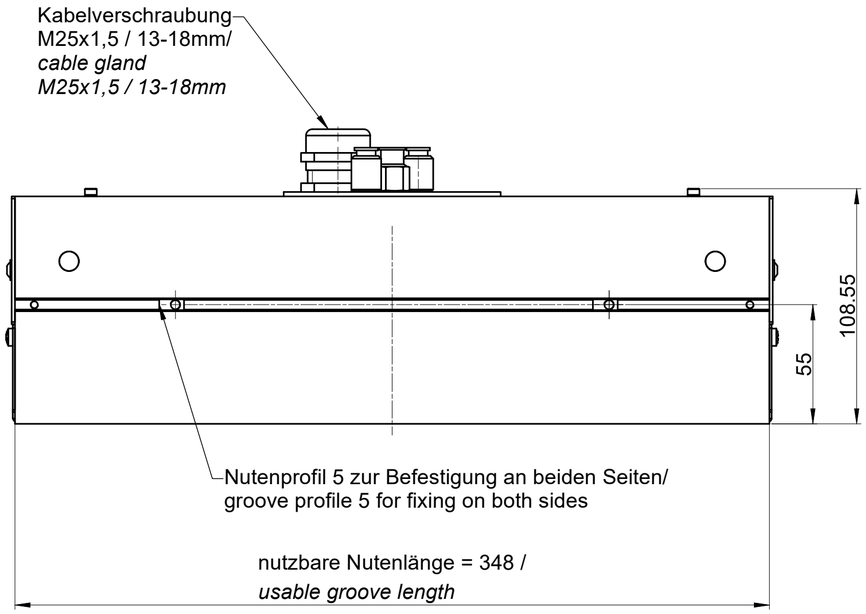

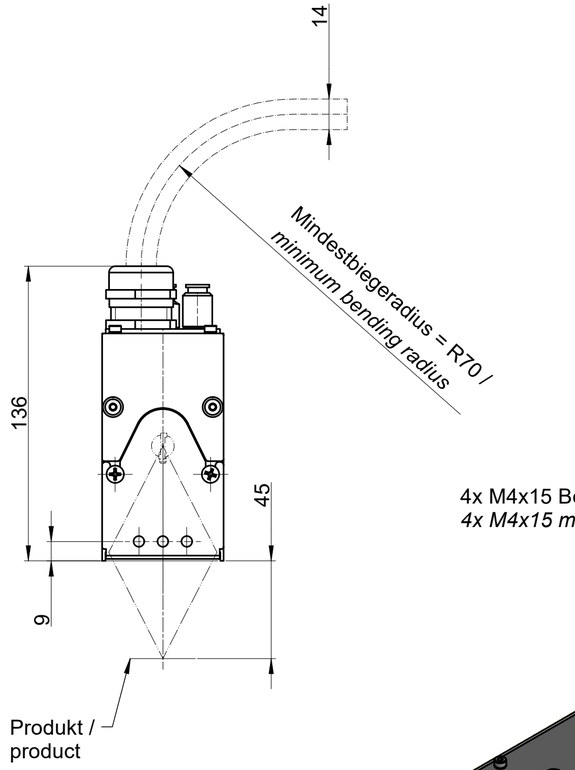

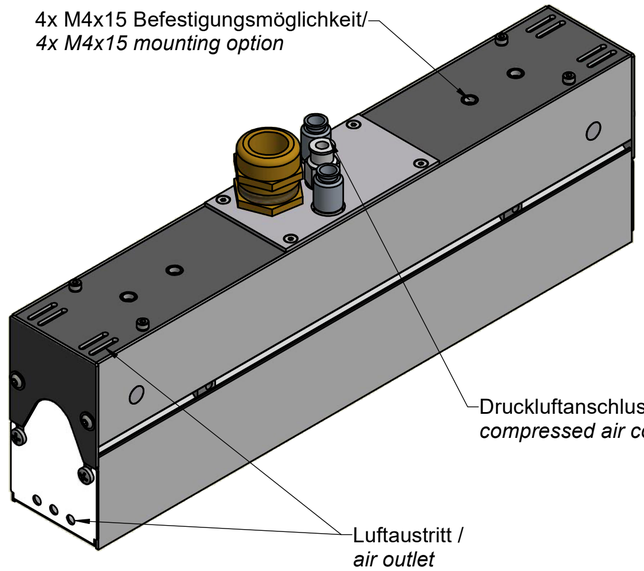

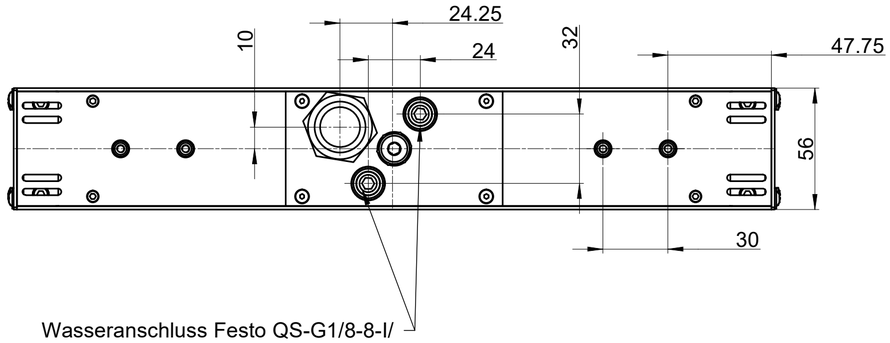

Urheberrecht / *Copyright*
Diese technische Unterlage ist unser geistiges Eigentum. Sie darf ohne schriftliche Zustimmung weder vervielfältigt, noch Dritten zu- gänglich gemacht, noch in anderer Weise mißbräuchlich verwertet werden. Verstöße können zivil- und strafrechtliche Folgen haben.
The copying, distribution and utilization of this documents as well as the communication of its contents to others without expressed authorization is prohibited. Offenders will be held liable for the payment of damages. All rights reserved in the event of the grant of patent, utility model or ornamental design registration.

Nr. *No.*	Kommentar *Comment*	Datum *Date*	Name
1	First edition	16.10.2020	MCHauzel

ISO 5456-2

Maße ohne Toleranzangabe nach ISO 2768-mk, bei Schweißkonstruktionen nach ISO 13920-BF
Dimensions without individual tolerace indications according to ISO 2768-mK, for welded constructions ISO 13920-BF

Kanten gratfrei oder nach Angabe
edges free of burs or according to designation

	Datum / *Date*	Name
Bearb. *Drawn*	02.10.2020	STreff
Geprüft *Checked*	16.10.2020	MCHauzel
Gedruckt *Printed*		

all IR: Modules & more GmbH

vertraulich
confidential

Maßstab: / *Scale:* 1 : 2

Gewicht: / *Weight:* 2,303 kg

Material:

Oberfläche: / *Surface:*

Rohmaterial: / *raw material:*

Abmessungen: / Dimension: (59,51, 356,10, 136,00) mm

aIR Liner

aIR Liner

258 W

Artikelnummer *Article No.*	Dateiname *filename*	Rev.	Format *size*
754516	754516[1].A01.idw	1	A2

Blatt: *Page.* 1 /1